EXTERNAL SURFACE AEUSSERE OBERFLAECHE SURFACE EXTERIEURE SUPERFICIE ESTERNA	
I	JED-259
II	JED-256 OR JED-256-1
III	JED-471 SCHWARZ/BLACK
IV	PLASTIC/KUNSTOFF
V	JED-007-1

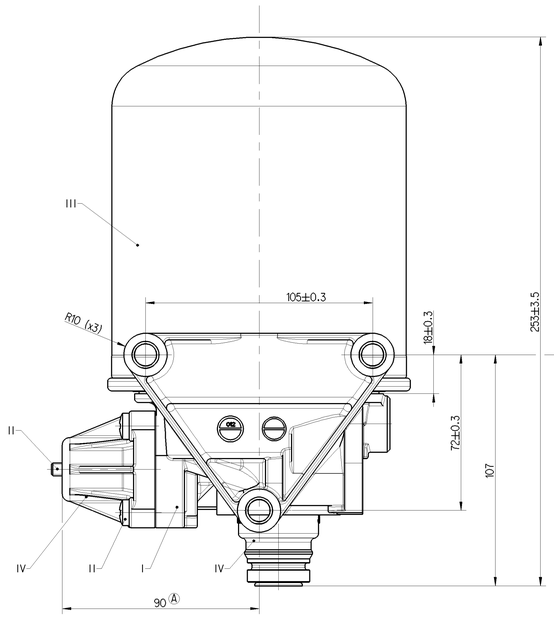

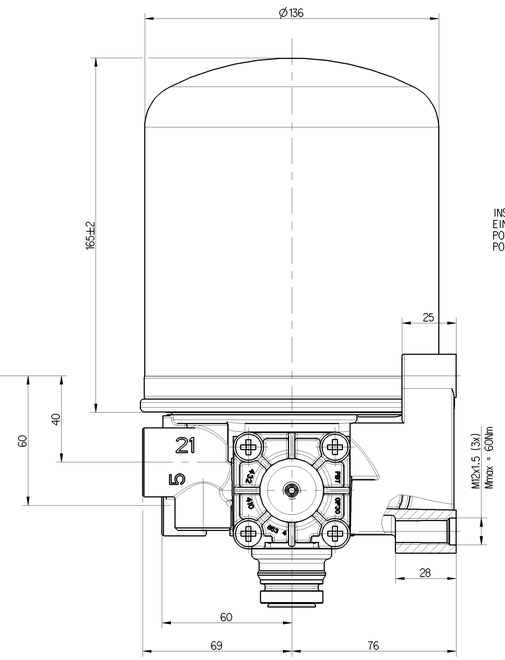

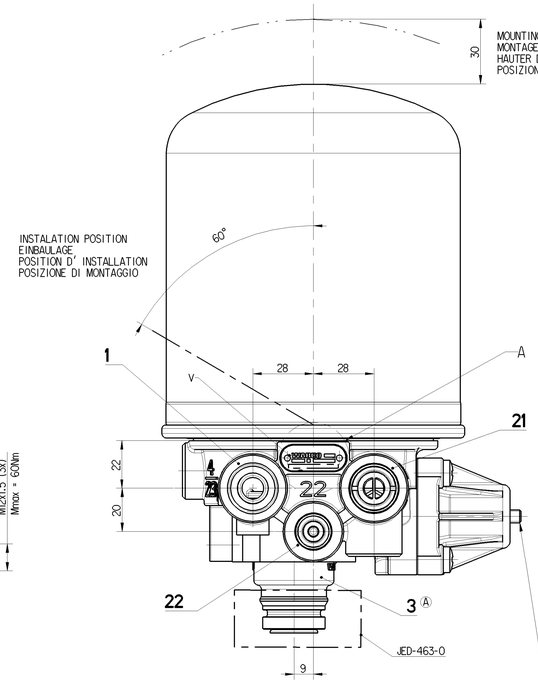

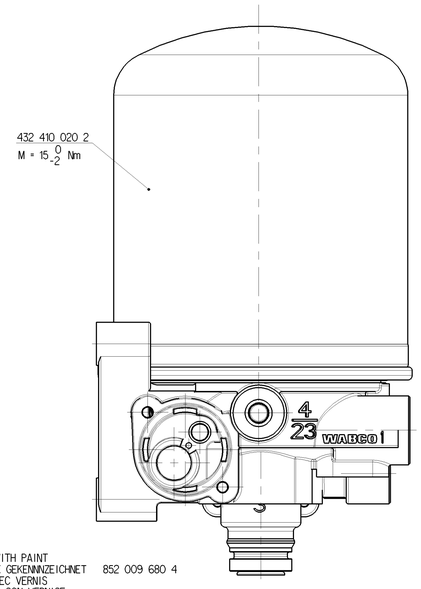

ADJUSTMENT MARKET WITH PAINT
EINSTELLUNG MIT LACK GEKENNNZEICHNET 852 009 680 4
ADJUSTAGE MARQUE AVEC VERNIS
REGOLAZIONE MARCATO CON VERNICE

TECHNICAL DATA, TECHNISCHE DATEN, CARASTERISTIQUES TECHNIQUES, CARATTERISTICHE TECNICHE

THERMAL RANGE OF CONTINUOUS APPLICATION: TERMISCHER DAUERANWENDUNGSBERREICH: PLAGE DE TEMPERATURE EN UTILISATION CONTINUE: COMPO DI APPICAZIONE CONTINUA:	-40°C... +65°C
RESISTANCE TO HEAT: WAERMEBESTAENDIGKEIT: RESISTANCE A LA CHALEUR: RESISTANZA AL CALORE:	+80°C MAX
MEDIUM: COMPRESSED AIR MEDIUM: DRUCKLUFT FLUIDE: AIR COMPRIME FLUIDO: ARIA COMPRESSA	
WORKING PRESSURE: BETRIEBSDRUCK: PRESSION DE SERVICE: PRESSIONE D' ESERCIZIO:	Pe MAX=13 bar
MAX. PREMISSIBLE FREQUENCY MAX. ZULAESSIGE FREQUENZ MAX. ADMISSIBLE FREQUENZE MAX. AMMISIBLE FREQUENZA	50 Hz
MAX. PREMISSIBLE ACCELERATION MAX. ZULAESSIGE BESCHLINIGUNG ACCELERATION MAX. ADMISSIBLE ACCLERAZIONE MAX. AMMESA	±10x g Ⓐ
COMBINED UNLOADER: DRUCKREGLER: REGULATEUR DE PRESSION: GRUPPO DI REGULAZIONE:	
CUT OUT PRESSURE: ABSCHALTDRUCK: PRESSION D'OUVERTURE: PRESSIONE D'APERTURA:	12.5±0.2 bar
OPERATING RANGE: SCHALTSPANNE: PLAGE DE REGULATION: GAMMA DI REGULAZIONE:	1.3 $^{+0.7}_{0}$ bar
DYNAMIC PRESSURE OF SAFETY VALVE: STAUDRUCK DES SICHERHEITSVENTILES: PRESSION DYNAMIQUE DU SOUPAPE DE SECURITE: PRESSIONE DINAMICA DELLA VALVOLA DI SICUREZZA:	14^{+4}_{0} bar (BEI $\mathring{V}$n=100dm^3/min.)
TORQUES FOR CONNECTIONS: ANZUNGSMOMENT FUER EINSCHRAUBSTUTZEN: COUPLE DE SARRAGE DES RACCORDS: COPPIA DI SERRAGGIO DEI RACCORDI:	M16x1.5: Mmax = 34 Nm M22x1.5: Mmax = 53 Nm
INSTALLATION POSITION AS DRAWN EINBAULAGE WIE GEZEICHNET POSITION D' INSTALLATION SUIVANT DESSIN POSIZIONE DI MONTAGGIO COME DISEGNATO	
PERMITED SILENCER: FREIGEGEBENER GERAEUSCHDAEMPFER SILENCIEUX PERMIS SILENZIATORE AMMESSO	432 407 012 0

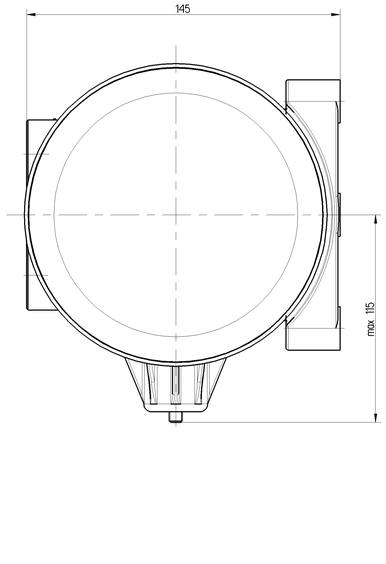

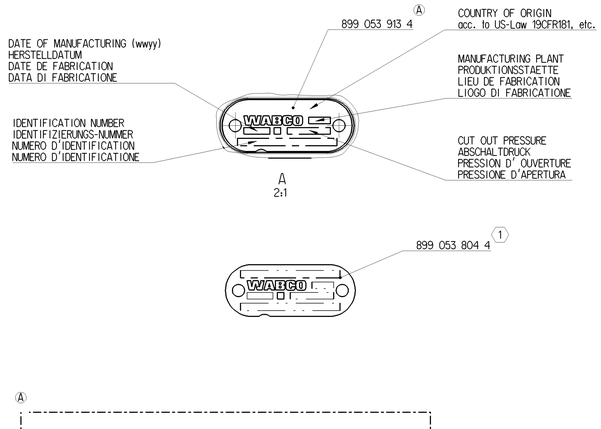

PORT ANSCHLUSS ORIFICE ORIFIZIO	FUNCTION FUNCTION FONCTION FUNZIONE	THREAD GEWINDE FILETAGE FILETTAURA
1	2 FROM THE COMPRESSOR VOM KOMPRESSOR PROVENANT DU COMPRESSEUR PROVENIENTE DEL COMPRESSORE	M22x1.5 JED-152 Ⓐ d=15
21	TO THE RESERVOIRS ZU DEN LUFTBEHAEL TERN AUX RESERVOIR AL SERBATOII PER	M22x1.5 JED-388
22	TO THE RESERVOIRS FOR REGENERATED AIR ZUM REGENERATIONS-LUFTBEHALTER AUX RESERVOIRS D' AIR REGENERE AL SEBRATOII PER L' ARIA RIGENERATIA	M16x1.5 JED-388
3	EXHAUST FOR COMPRESSED AIR ENTLUEFTUNG FUER DRUCKLUFT ECHAPPEMENT POUR AIR COMPRIME SCARICO PER AIRIA COMPRESSA	-

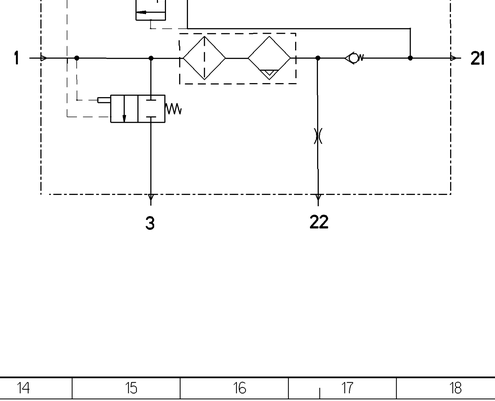

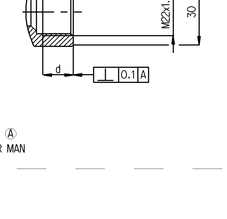

Ⓐ
1 FOR MAN

General Specification: JED-334-0					
Further Technical Data:	Product Specification				
Doc. Code: D35	Sheet: 1 To 4				
General Tolerances JED-261					
Class 11	Range of Nominal Dimensions (in mm) ≤ 50	> 50 ≤ 180	> 180 ≤ 400	> 400	
Fine	0.5	1.0	1.5	2.0	
Medium X	1.0	2.0	3.0	4.0	±3°
Coarse	2.0	3.5	5.0	6.5	
Tapped Holes acc.:					
11 Tolerance Class Applied Crossmarked					

Copyright WABCO®

Date: 2015-02-13	Drawn: Kurzynski	Signature
Date: 2015-02-16	Checked: Liter	
	Expert: Liter	

WABCO

AIR DRYER
LUFTTROCKNER
DESSICATEUR D' AIR
ESSICATORE D' ARIA

Mass: 3.50 kg	Scale: 1:1 (2:1)	Material No.: 432 410 113 0		Date of first issue: 1993-08-04
Size: A	CAD System: A O Pro/E	ECN No.: 164709	Revision: 8 x A	Doc.Code: 005 / Language: ML / Sheet: 1/1
		Techn. Reg.: 5050	Replacement for: Remove from 4324109170	

100mm