MATERIAL AND SURFACE PROTECTION		
I	JED-475-2	JED-257
II	JED-029M1	JED-259
III	PP	-
IV	8.8	JED-257
V	8.8	JED-257
VI	JED-7080M	-

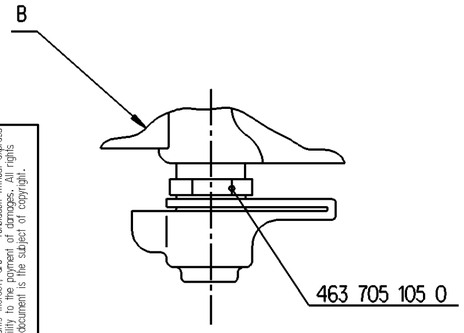

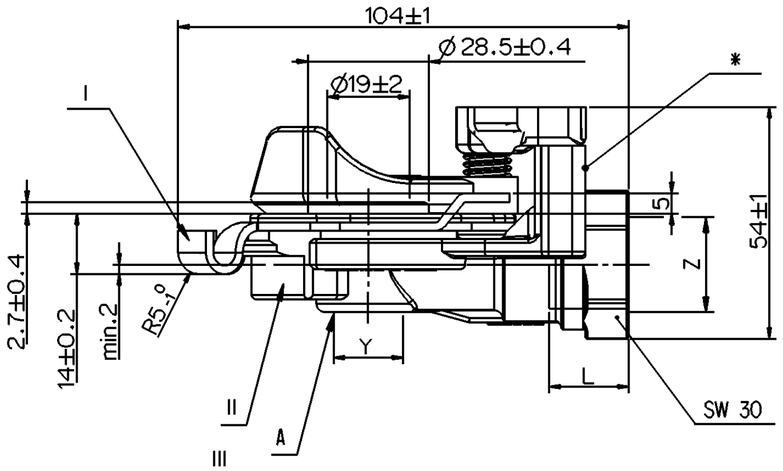

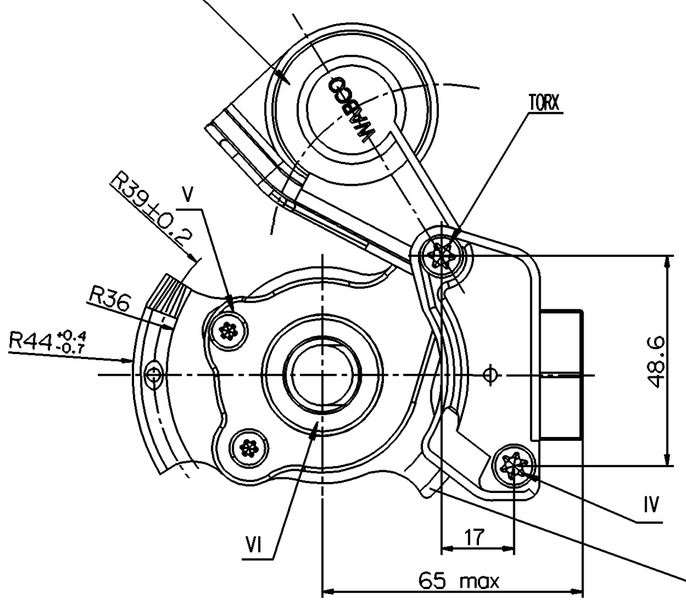

DETAIL C

ONLY FOR VARIANTS WITHOUT THE SAFEGUARD

NUR FUR VARIANTEN OHNE VERTAUSCHSICHERUNG

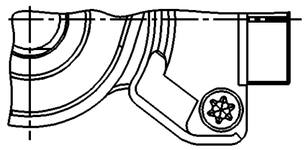

SAFEGUARD AGAINST CROSS-COUPLING
VERTAUSCHSICHERUNG
SECURITEEN CAS DE DEFAUT DE CONNEXION
PROTEZIONE CONTRO CONNESSIONE INCORRETTA

USAGE VERWENDUNG UTILISATION APPLICAZIONE	CONTROL LINE BREMSLEITUNG CONDUITE DE COMMANDE TUBAZIONE DEL FRENO		
SYMBOL SYMBOL SYMBOLE SYMBOLO ISO 1219			
DESIGNATION BEZEICHNUNG DESIGNATION DESIGNAZIONE	SYMBOL SYMBOL SYMBOLE SYMBOLO	UNIT EINHEIT UNITE UNITA	VALUE WERT VALEUR VALORE
WORKING TEMPERATURE THERMISCHER ARBEITSBEREICH TEMPERETURE DE FONCTIONNEMENT TEMPERATURA DI UTILIZZAZIONE	T	°C	-40°+80°
MAX INLET PRESSURE MAX BETRIEDSDRUCK PRESSION D'ALIMENTATION MAXI PRESSIONE MASSIMA D'ALIMENTAZIONE	P	BAR	8,5
WORKING POSITION EINBAULAGE POSITION DE FONCTIONNEMENT POSIZIONE DE FUNZIONAMENTO	UNIMPORTANT BELIEBIG INDIFFERENTE INDIFFERENTE		
WORKING MEDIUM ARBEITSMEDIUM FLUIDE D'UTILISATION FLUIDO DI ESERCIZIO	COMPRESSED AIR DRUCKLUFT AIR COMPRIME ARIA COMPRESSA		
NORM NORM NORME NORMA ISO 1728			
AMBIENT MEDIUM UMGEBUNGSMEDIUM FLUIDE AMBIANT FLUIDO AMBIENTE	AIR (CONTAINING WATER DUST AND OIL) LUFT (WASSER-, STAUB- UND OELHALTIG) AIR (HUMIDE, HUILEUX POUSSIEREUX) ARIA (ACQUA, POLVERE ED OLIO INQUINATO)		

* WABCO DEVICE NO., DATE OF MANUFACTURE
WABCO-GERATE NR., HERSTELLDATUM
NUMERO DE L'APPAREIL WABCO, DATE DE FABRICATION
NUMERO DELL'APPARECCHIO WABCO, DATA DI FABBRICAZONE

452 200 000 0		M22X1.5	-	-	min 15,5	A	-	-
452 200 004 0		M22X1.5	-	-	min 15,5	A	-	BLACK,SCHWARZ,NOIR,NERO
452 200 012 0		M22X1.5	-	-	min 15,5	A	+	YELLOW,GELB,JAUNE,GIALLO
952 200 022 0		M16X1.5	-	-	min 13	A	+	YELLOW,GELB,JAUNE,GIALLO
952 200 023 0		M16X1.5	-	-	min 13	A	-	BLACK,SCHWARZ,NOIR,NERO
952 200 033 0		M16X1.5	JED-464	-	min 13	A	+	YELLOW,GELB,JAUNE,GIALLO
952 200 034 0		M22X1.5	JED-464	-	min 15,5	A	+	YELLOW,GELB,JAUNE,GIALLO
952 200 035 0		M16X1.5	JED-464	M16X1.5	min 13	A	+	YELLOW,GELB,JAUNE,GIALLO
952 200 040 0		M16X1.5	JED-464	M16X1.5	min 13	B	+	YELLOW,GELB,JAUNE,GIALLO
IDENTIFICATION BENENNUNG DENOMINATION DENOMINAZIONE	CUSTOMER NO. KUNDEN-NR. NO. DU CLIENT NO CLIENTE	Z	REMARKS	Y	L	DESIGN AUSFUEHRUNG EXECUTION ESECUZIONE	SAFEGUARD VERTAUSCHSICHERUNG SECURITEN PROTEZION	COVER VERSCHLUSSDECKEL COUVERCLE COPERCHIO

DCN-No.	Rev.	Date
111851	G	06-12-12
066021	F	06-04-06
065347	E	06-03-21
087122	4x D	03-07-22

State of Revision

General Specification: JED-334-0
Further Technical Data:
Doc. Code: Sheet: To

General Tolerances JED-261

Class 1)		Range of Nominal Dimensions (± mm) ≤ 50	> 50 ≤ 180	> 180 ≤ 400	> 400	∢
Fine		0.5	1.0	1.5	2.0	±3°
Medium	X	1.0	2.0	3.0	4.0	
Coarse		2.0	3.5	5.0	6.5	

Tapped Holes acc. JED-152
1) Tolerance Class Applied Crossmarked

Copyright WABCO®

	Date	Signature
Drawn	2006-02-10	BERGHOFF
Checked	2006-02-10	HRS
Expert	BUCZYLKO	

WABCO

HOSE COUPLING
KUPPLUNGSKOPF
TETE D'ACCOUPLEMENT
TESTA D'ACCOPIAMENTO

Mass	Scale	Material No.	WABCO Id. No.: 9528970060		
0,22 KG	1:1	952 897 006 0	Doc.Code 653	Language en/de fr/it	Sheet 1/1
Size A 2	TRI 540	Function Code	CAD System Pro/E	Prod.Type 0 0 X	Replacement for

100mm

Non è permesso consegnare a terzi o riprodurre questo documento, né utilizzarne il contenuto o renderlo comunque noto a terzi senza autorizzazione esplicita. Ogni infrazione costituirà un reato e darà luogo a danni. Si riserva il diritto di brevetto o modello.

Copying of this document and giving it to others and the use or communication of the contents thereof, are forbidden without express authority. Offenders are liable to the payment of damages. All rights are reserved in the event of the grant of patent or registration of a utility model or design. This document is the subject of copyright.

Toute Communication ou reproduction de ce document, toute exploitation ou communication de son contenu sont interdites, sauf autorisation expresse. Tout manquement à cette règle constitue un délit exposé son auteur au versement de dommages et intérêts. Tous droits de propriété industrielle réservés, notamment en matière de brevets et de modèles.

Weitergabe sowie nicht gestattet, soweit nicht ausdrücklich zugestanden. Zuwiderhandlungen verpflichten zum Schadensersatz. Verwertung und Mitteilung ihres Inhalts Alle Rechte über den Fall der Patenterteilung oder Gebrauchsmustereintragung vorbehalten.